HOT COAT™ Plus 7
MANUAL

Hot Coat™ Plus 7

(#HCP7 – Rev. Jan 07)

Glue Machinery Corporation™
4234 Boston Street, Baltimore, MD 21224
888-202-2468 · Fax: 410-761-5127 · E-mail: info@gluemachinery.com
www.gluemachinery.com

TABLE OF CONTENTS

CHAPTER 1 SAFETY SUMMARY

1.1 Introduction
1.2 Safety During Installation
1.3 Safety During Operation
1.4 Safety During Maintenance
1.5 Safety When Using Adhesive and Solvents

CHAPTER 2 EQUIPMENT

2.1 Introduction
2.2 Specifications
2.3 Characteristics
2.4 Functional Description
2.4.1 Heating System
2.4.2 Driving System

CHAPTER 3 INSTALLATION

3.1 Environmental Requirements and Installation
3.2 Power Installation

CHAPTER 4 OPERATION INSTRUCTIONS

4.1 Parts/Function
4.2 Before Operation
4.3 Machine Startup
4.4 Machine Adjustments
4.5 Shut-Off Procedures

CHAPTER 5 TROUBLESHOOTING

5.1 Troubleshooting

CHAPTER 6 MAINTENANCE & SERVICING

6.1 Machine Maintenance
6.2 Cleaning the Upper Roller

CHAPTER 7 DRAWING/PARTS

7.1 Assembly Drawings and Parts List, Speed Control (Inverter) Keypad Operations
7.2 Recommended Spare Parts List

Chapter 1 - Safety Summary

1.1 Introduction

This chapter is intended as an introduction to the installation, operation and maintenance of the Roll Coater and sets out the safety rules to be observed for preventing risk both to personnel and to the equipment.

1.2 Safety During Installation

1. Establish correct and effective ground connection for entire apparatus. Without such connection, every element of the apparatus even those apparently insulated become a potential conductor and pose a risk of electrical shock.
2. Check that the power cords and their insulation are correctly dimensioned for the load constituted by the apparatus complete with all its accessories.
3. Always operate the apparatus in accordance with the recommended current and voltage. If the apparatus is operated at voltages and currents other than recommended this may create potential fire risk.

1.3 Safety During Operation

1. Do not operate the equipment near volatile or otherwise explosive gases or materials.
2. Do not operate the equipment without the covers, panels and safety guards properly installed.
3. Do not operate the equipment at a temperature above 50ºC or below 0ºC (122ºF/32ºF).
4. Do not use the equipment as a ladder or stepping stool.
5. Only the base of the Roller Coater can be used while moving or lifting the machine. Do not use outstretched parts or components on control panel as supporting parts for lifting.
6. Never put your fingers into the middle of two rollers when running or servicing the machine.

1.4 Safety During Maintenance

The main precautions to be adopted when carrying out maintenance are:

1. Disconnect the electrical power supply before performing maintenance on the equipment.
2. Do not wear rings, watches, bracelets, etc. when carrying out the maintenance.
3. Do not in any way inspect or adjust any component unless another person is present and able to ensure immediate assistance in event of an accident.
4. Employ only qualified personnel for maintenance work on the equipment.
5. Never touch bared connection or components while power is on without disconnecting the electrical power supply. Dangerous voltage exists at several points in the equipment.
6. Disconnect the electrical supply before removing any protection case or changing any electrical component.
7. If possible, stand on a rubber-insulating mat when carrying out maintenance on the hot melt applicator. Do not work on wet floors or in very damp surroundings.

8. Always use protective gloves and clothing which gives the maximum protection to parts of the body liable to be splashed by hot melt or that may come in contact with the hot surface of components.
   Note: Do not wear gloves when feeding pieces into the roller.
9. To avoid injury in the internal surface of the equipment, do not use any tools with open flames or sharp tips to clean a hot melt applicator.
10. Never operate the equipment with air or adhesive leaks (air or hot melt) in the system.

1.5 Safety When Using Adhesive and Solvents

A. Adhesive

1. Use extreme care when working with molten materials as they solidify rapidly and present a hazard. Severe burns can occur if the molten materials first solidify; they are still hot.
2. Always wear protective clothing and eye protection when handling molten materials or working near equipment containing hot melt adhesive under pressure.

B. Heating Solvents

1. Do not use an open flame or uncontrolled heating device to heat solvents.
2. Do not use paint-type solvents under any circumstances. These solvents are volatile and may be a fire and/or toxic-vapor hazard even at room temperature.
3. Always be sure that the work area is adequately ventilated.
4. Avoid prolonged or repeated breathing of solvent vapors.

Following are the major applicable cleaning solvents:

1. Fluoride solvent:
   Dichlorofluoromethane
   Trichlorofluorometyane

2. Chloride solvent:
   Carbon tetrachloride
   Chloroform
   Dichloromethane
   Ethylene dichloride
   Methylene chloride
   Monochloro-benzene
   Monochlorotoluene
   Perchloroethylene
   Trichloroethylene

3. Trichloroethylene:
   Ethylene dibromide
   Methylbromide
   Methlene chlorobromide

4. Lodide solvent:
   Ethyliodide
   Methyliodide
   N-butyliodide
   Propyliodide

Kerosene and white mineral oil are also recommended cleaning solvents.

IF MOLTEN MATERIAL COMES IN CONTACT WITH THE SKIN:

- **Do not try to remove molten material from the skin.**
- **Immediately immerse the affected area in cold, clean water. Keep the affected area immersed until the material has cooled.**
- **Do not try to remove the cooled material from the skin.**
- **Cover the affected area with a clean, wet compress.**
- **In case of severe burns, look for signs of shock. If shock is suspected, have the patient lie down, use blankets to preserve body heat and elevate the feet several inches.**
- **Call a physician immediately.**

Chapter 2 – Equipment

Fig 2.1

2.1 Introduction

This Chapter provides the general overview (Fig 2.1), Dimensions (Fig. 2.2), Simple Working Procedure (Fig. 2.3), Specifications, Characteristics, and Functions of the Hot Coat Plus 7 roll coater.

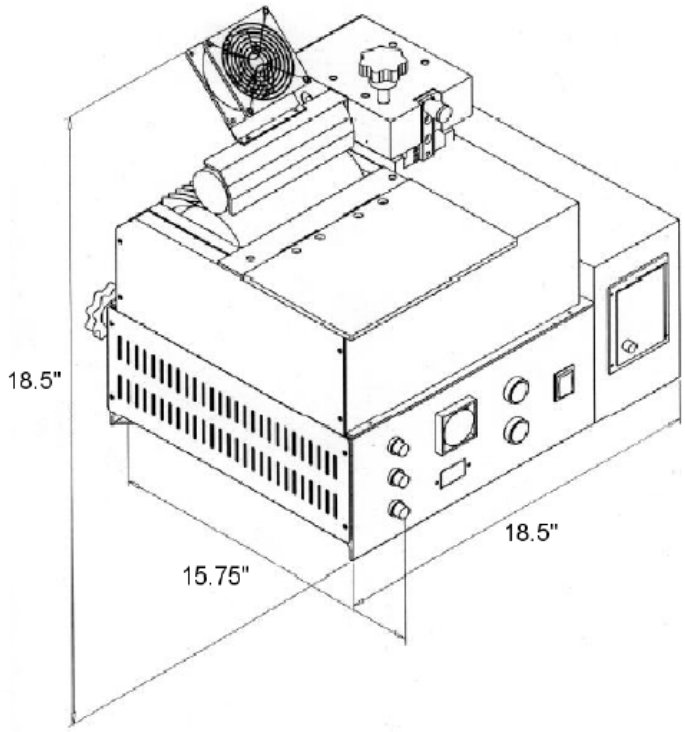

Fig. 2.2

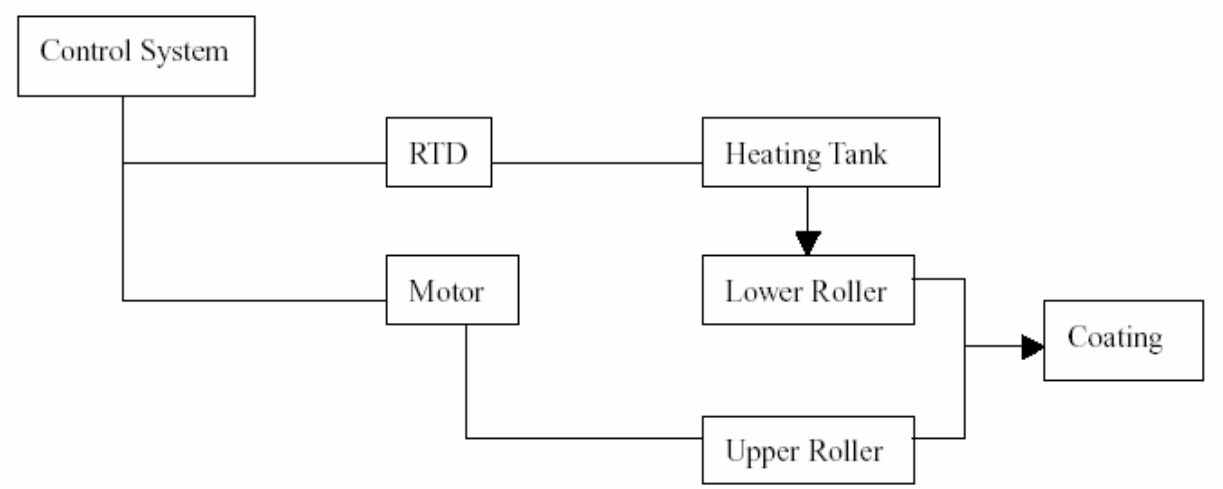

Fig 2.3 Simple Working Procedure

2.2 Specifications

Item	HCP7
Power Supply Demand	220VAC/50HZ
Power	2KW
Net weight	106 lb.
Size (L x W x H: inches)	18.5 x 15.75 x 18.5
Tank Capacity: pounds	4.2 lb.
Max Apply Width: Inches	7.086”
Max. Substrate Thickness	.75”
Max. Viscosity	20,000CPS
Max. Melt Rate	5.5 Lb/Hr

2.3 Characteristics

- The coating speed, coating thickness and material thickness can be regulated.
- The adoption of a tank cover, insulation board, peel-off plate, emergency stop button and roller reverse button prevent injury to the operator.

WARNING:
DO NOT TOUCH THE HOT AND/OR RUNNING ROLLER.

The driving system is indirectly under the control of the heating system. If the pre-set temperature of the tank is not reached, the roller will not run.

2.4 Functional Description

2.4.1 Heating System

Heaters are built into the bottom of the tank and inside the lower roller heating the adhesive to the desired temperature. The mechanic temperature controller (TI3) controls the tank temperature, and the electronic proportional temperature controller controls the roller temperature. It will take approximately 40 minutes to melt the adhesive completely.

2.4.2 Driving System

When the pre-set temperature of the tank has been reached, motor drives Gear A of the lower roller via a chain, Gear B of the upper roller works with Gear A allowing both rollers to run. A portion of the lower roller is dipped into the tank and the lower roller then brings the adhesive to the center of the two rollers. When a work piece goes between them, adhesive will coat the surface. The roller speed is controlled with the inverter.

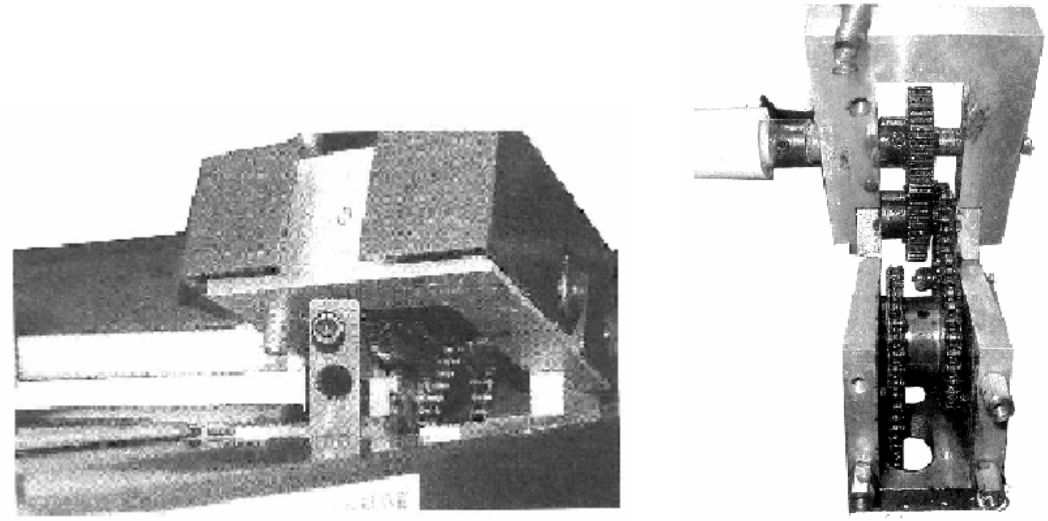

Picture 2.4 Drive Chain

Specification of Motor:

Power Supply Demand	200VAC
Power	200W
Frequency	50HZ

Chapter 3 - Installation

3.1 Environmental Requirements and Installation

1. Allow enough space for operators to walk around the machine.

2. Place the machine on a flat surface near the assembly line. Secure the machine tightly.

3. Avoid installing the machine where the temperature is below 0ºC or above 50ºC (32ºF/122ºF)

4. The surroundings must be dust free and vibration free.

5. Avoid air flowing on the surface, as this will affect the coating.

6. Avoid opening the tank cover when unnecessary.

7. Try to avoid foreign matter from entering the driving mechanism as this will damage the machine. And try to avoid impurities from entering the center of both rollers to prevent damage to the rollers.

8. Use only the base when attempting to lift or move the machine. Do not use the rollers, fan, knobs or grips. To prevent burns, **DO NOT** move the machine when it is melting adhesive.

3.2 Power Installation

1. Check the main power value. The rated voltage of these Roller Coaters is 220VAC, 50~60HZ and single phase. Do not alter the machine to work at another voltage, as it will damage the machine.

2. Disconnect the power supply before opening the shield of the Electric Control Cabinet.

3. Ensure that the main power breaker is off.

4. Ensure that the machine is grounded. When installing the power cords be sure to connect a safe and reliable ground line to the clip to prevent a shock.

5. Assure that the cords to the outer power supply are connected to the internal terminals of the machine.

NOTE: After the above steps are completed, DO NOT switch on the machine at once. Before operation please carefully read the following chapter.

Chapter 4 - Operating Instructions

4.1 Function of the Control Panel

The controls include the PID temperature control, main power switch, motor start button, emergency stop button, and fuse base. Detailed instructions are given as follows. Ensure that you carefully read the operation instructions before running the machine. Improper operation will lead machine and personal injury. (Fig4.1 Control Panel)

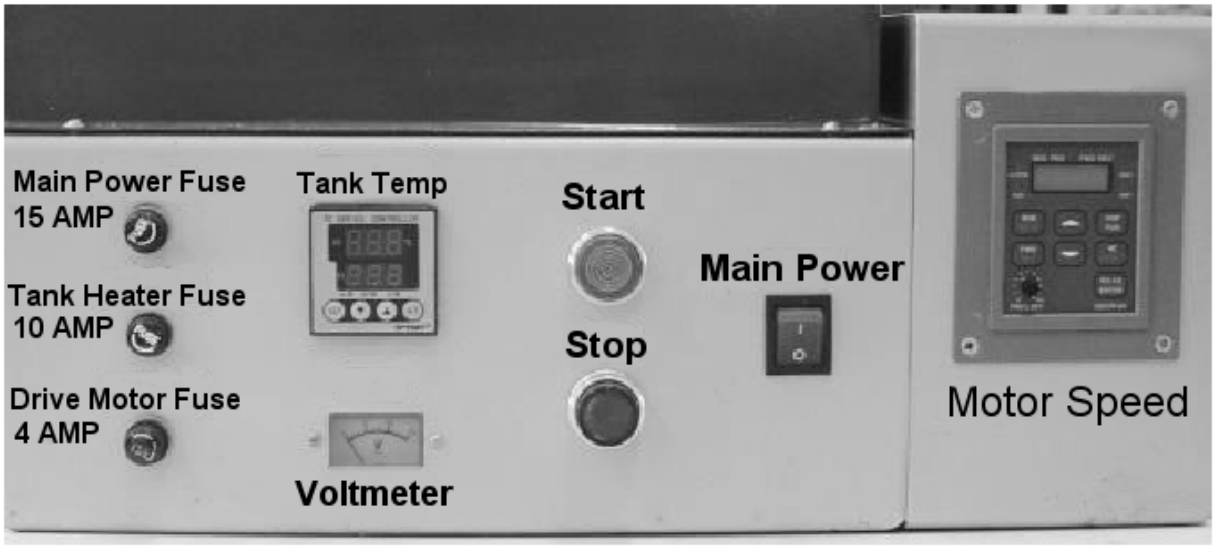

Fig. 4.1 HCP7 Control Panel

PID Temperature Controller

No	Panel Words	Specification
1	PV	Displaying Present Temperature of tank
2	SV	Displaying Setting Value
3	AL	Indication Lamp for Alarm: ON/OFF
4	OUT	Indication Lamp for output: ON/OFF
5	AT	Indication Lamp for Auto Tune: ON/OFF
6	SET	Select/confirm Key
7	▽	Decrease Key
8	△	Increase Key
9	AT (key)	Auto Tune Key

Key operation:

Press SET key for 3 seconds, enter the PID parameter, and adjust menu.

Press SET key to select the parameter you want to modify, then press SET+ △ key at the same time, LED flashes. Hold SET press △ key again and shift the figure you want to modify.

Then release SET key and press △ / ▽ key you can increase /decease the value. Press SET key to confirm at last.

The unit will go back to measuring state without key operation for 25 seconds; it also goes back to the measuring state.

SV setting and Auto Tune operation

SV setting: In the measuring state, the SV can be set, as you want as above

AUTO TUNE operation:

When PID not working (p< >0), press AT key for 3 secs.
Do not modify the parameter at this time. The AT lamp will go off when the auto tune is finished. The unit will refresh PID value and go to the adjustment state.

Press AT key for 3 secs, AT lamp off, the unit will also go to the adjustment state during the course of auto tune. If necessary, the user can modify the PID parameter by themselves to get better result.

You can select (°C) or (°F) as the unit to display temperature.

When the unit is POWER ON, if PV is increasing towards SV, that means the heater is working; if PV is equal to SV, that means the target tank temperature is reached.

2.Main Power Switch

Put the switch at ON, it gives off light from inside. This means the roll coater is POWERED ON.

3. Motor Start Button

Until tank temperature is reached (PV=SV), you can not start the motor by depressing the green button.

4. Motor Stop Button

Stop the motor by depressing the red button.

5. Voltage Meter

The meter indicates the working voltage of the heater inside the melting tank. High volts for high viscosity adhesive, low volts for low viscosity adhesive. Resistant for voltage adjustment is inside the right section of the machine. Before adjustment you will have to remove the chain cover.

6. Roller Rate:

With the small knob on the panel of the inverter, you can adjust the roller rate. Clockwise direction to increase roller rate while the opposite direction rotation will decrease the roller rate. See “Keypad Operations” diagram in back of manual for more detail.

4.3 Before Operation

Load clean and dry hot melt adhesive into the tank.

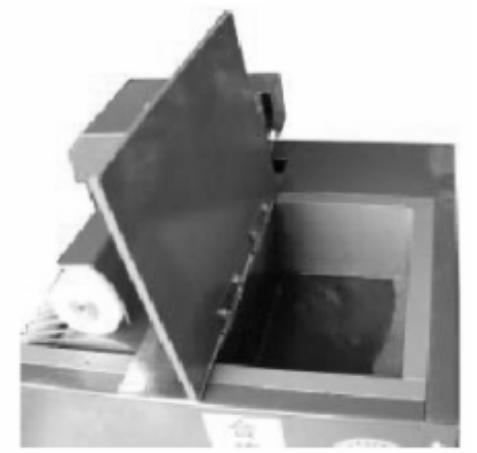

NOTE:

Before loading adhesive into the tank, put the main power switch in OFF position. Get the outer power source disconnected.

1. Cover the tank to avoid foreign matters falling into the tank.
2. Connect power source.
3. Switch on the main power. As introduced in 4.1, set or modify proper SV value if necessary. To modify roller’s heater resistance depending on the adhesive viscosity. (Please refer to the introduction about voltage meter in this chapter).
4. Prepare materials for trial coating.

5. When PV=SV on the PID unit (the preset temperature of the tank is reached) and adhesive is completely melted: Depress the motor START button (green).
6. Test coating with materials. Adjust roller gap and coating thickness depending on the test result.

When these steps are done, the roll coater is ready to run.

Machine Start-up

1. Connect the power source.
2. Switch on the machine with the main power switch on the control panel.
3. Check the hot melt adhesive inside the tank. The normal level is at 30% to 80% of the tank capacity. Do not put too much adhesive into the tank.

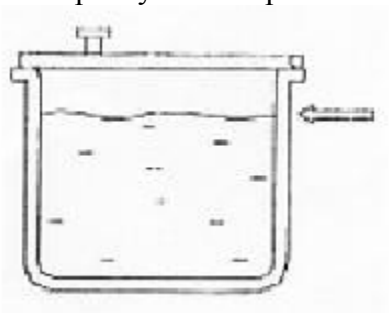

4. Check if the temperature controller is properly set. If not, modify it.
5. Check if hot melt adhesive is completely melted when PV reaches SV on the PID unit. If both are OK, follow the next step.
6. Star the motor by depressing the START button. You can now coat.
7. You can stop the motor by depressing the STOP button. (Both buttons are on the control panel)

4.4.2 How to Shut Down the Machine

Switch off the machine with the main power switch. Disconnect power source

Machine Adjustments

4.5.1 Roller Gap

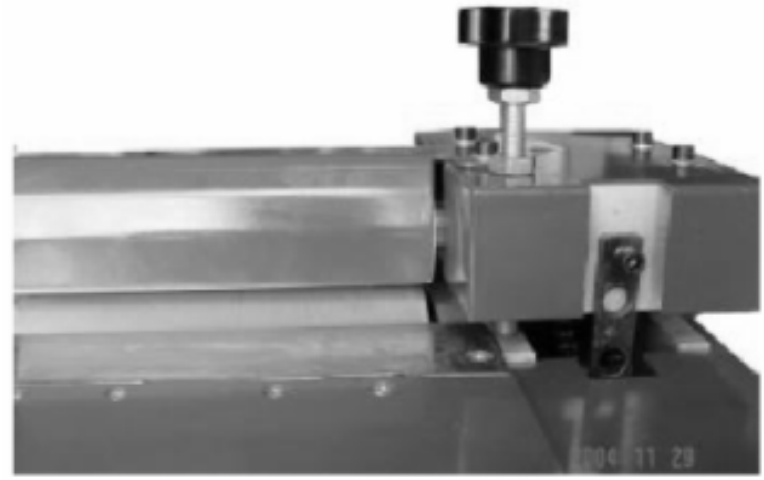

When coating; different materials need different amounts of roller gap. Good roller gap can compensate for different thickness of material and ensure smooth coating.
Turn the knob on the right of the rollers to make adjustments. Seen from above, clockwise rotation will enlarge the gap, counter-clockwise rotation will decrease the roller gap.

4.5.2 Coating Thickness

Turn the knob behind the machine to adjust the adhesive coating thickness. Seen from back, clockwise rotation will increase the coating thickness, counter-clockwise rotation will decrease the coating thickness.

Chapter 5 - Trouble Shooting

5.1 Trouble Shooting Procedures

Problem	Possible Cause	Solution
Hot melt adhesive clinging to the upper roller.	1. Material too thin resulting in hot melt adhesive clinging to the upper roller. 2. The surface of the roller is not clean. Cloth fiber or foreign particles are attached.	1. If the material is too thin, place more material together to increase the roller gap. 2. Clean the upper roller with mineral oil to prevent adhesion.
Coating Uneven	1. Upper roller is set too high or not parallel to the lower roller. 2. Foreign matter between the blade and the roller is affecting the coating. 3. Not enough hot melt adhesive in the tank.	1. Re-adjust the upper roller. 2. Clean the roller. 3. Check if there is enough hot melt adhesive in the tank.
Material produces "silk" between the rollers.	1. Roller temperature too low. 2. Incorrect hot melt adhesive.	1. Raise the roller temperature until no "silk" forms. 2. Change to a more suitable hot melt adhesive to avoid smoking.
Hot melt adhesive is yellowish or charred.	1. Roller temperature may be too high. 2. Coating length is too long. Roll coater brings too much air for oxidization. 3. Hot melt adhesive has poor anti-oxidization ability or has aged.	1. Lower the roller temperature to prevent "silk". 2. Stop the roller from running when coating has paused for some time. 3. Change the hot melt adhesive for better anti-oxidization character.
Material drawn into the melting tank.	1. The gap between the drawn proof blade and the roller is too big. 2. Roller temperature is too low. 3. The material is either too thin or too thick. It is not suitable for roll coating.	1. Adjust the gap between the blade and the roller with screwdriver. Make it as tight as possible. 2. Raise the roller temperature. 3. Use another kind of applicator for material.
The work piece will twist around the upper roller when coating.	1. The upper roller has hot melt adhesive on it making it sticky. 2. The work piece has been treated with hot melt adhesive or another type of adhesive.	1. Once slight twist occurs, stop the machine and clean it with kerosene. Clean the machine routinely with mineral oil. 2. The material cannot be coated twice.

Problem	Possible Cause	Solution
Roller or tank cannot warm up	1. Heater is damaged. 2. Temperature controller is damaged. 3. Main fuse blown. 4. RTD is damaged. 5. Power cord is damaged or disconnected. 6. The mechanic temp. controller which limits the maximum temperature of the tank is broken.	1. Replace it with new heater. 2. Replace it with a new temperature controller. 3. Replace the fuse with a new one. 4. Replace it with a new RTD. 5. Replace cord or connect to the power. 6. Replace the temperature controller.
The motor power indicator is on but the motor fails to run.	1. Blown fuse. 2. The inverter is not set correctly, or the inverter is bad. 3. Coating roller gear is damaged. 4. Power cords are damaged or broken or not connected to the power.	1. Replace the fuse with a new one. 2. Refer to the inverter manual. 3. Replace the gear with a new one. 4. Replace the cords or connect to the power.

Chapter 6 - Maintenance & Servicing

6.1 Machine Maintenance

1. Always keep the machine surface clean. Clean with kerosene. Do not use gasoline, toluene or any other solvent.

2. Always keep the upper roller clean, if adhesive is adhered to the roller stop the machine and clean with kerosene. Use white mineral oil for regular maintenance.

3. To get good coating quality, regularly clear yellowish or aged hot melt adhesive in the in tank.

4. Do not run the motor when clearing or performing regular maintenance. Hands can be drawn into the center of the rollers.

5. During operation cloth or paper scarps will possibly fall into the tank. They will be stuck between the roller and the blade as rollers run. This will affect the coating effect. It must be cleaned when needed.

6. Always wear safety gloves and long sleeved shirts when performing maintenance to prevent burns.

7. Always keep the exhaust fan clean. Clean it with kerosene.

8. Regularly open the side metal plate. Clean and lubricate the gears and chains.

6.2 Cleaning the Upper Roller

1. The roller is Teflon coated for easy cleaning.

2. To prevent scratching the Teflon coating, do not use sharp metal tools to clean the tank.

Chapter 7. Drawings

7.1 Assembly Drawings, List of Parts, Speed Control (Inverter) Keypad Operations

7.2 Recommended Spare Part List*

*PLEASE CONTACT GLUE MACHINERY CORPORATION FOR RECOMMENDED SPARE PARTS

Toll Free: 888-202-2468
Phone: 410-761-2727
Email: info@gluemachinery.com

HOT COAT™ Plus 7

Variable Speed Wheel

Dimensions

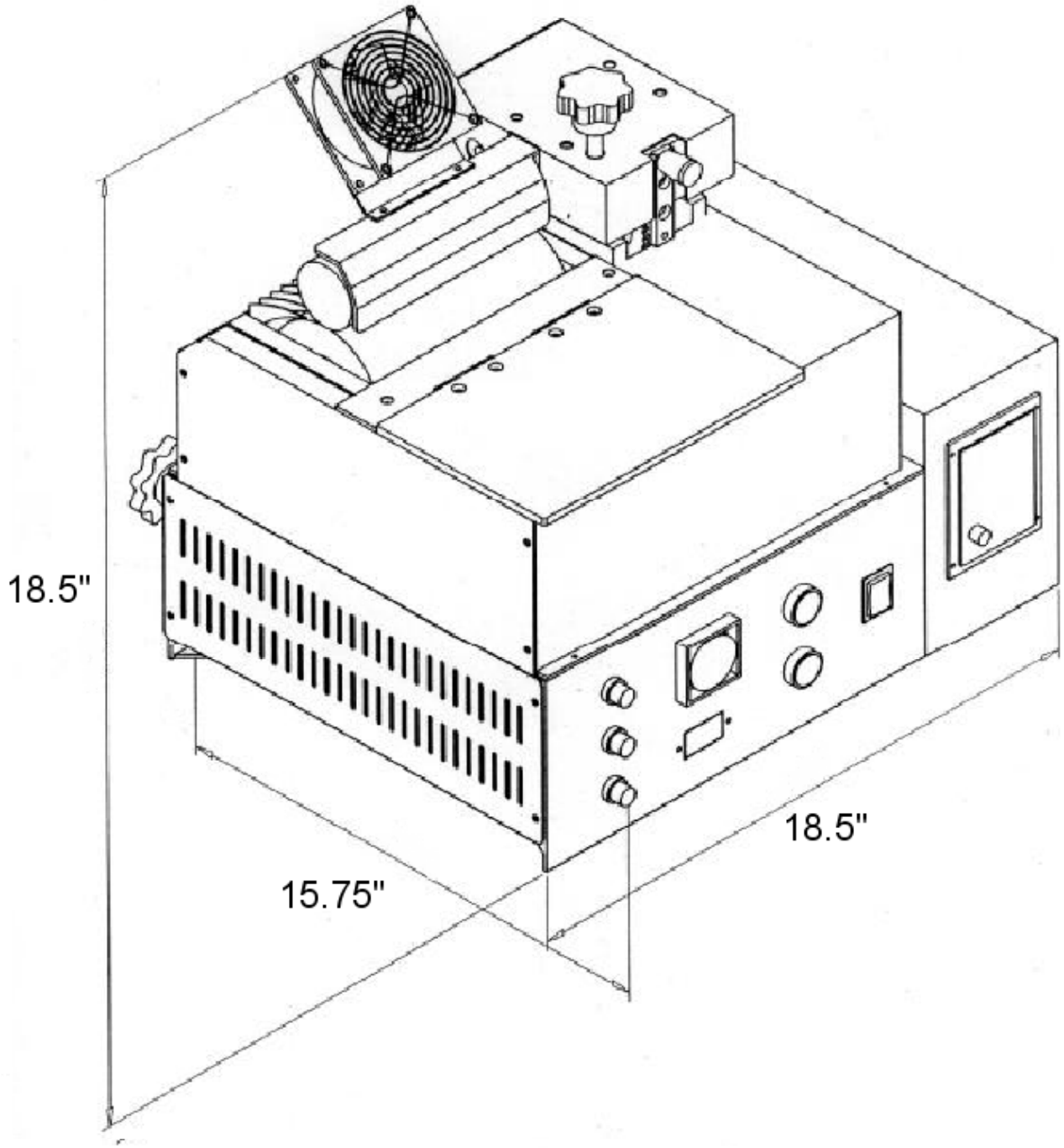

Glue Machinery Corporation™

410-761-2727 FAX: 410-761-5127

Email: info@gluemachinery.com

Web: www.gluemachinery.com

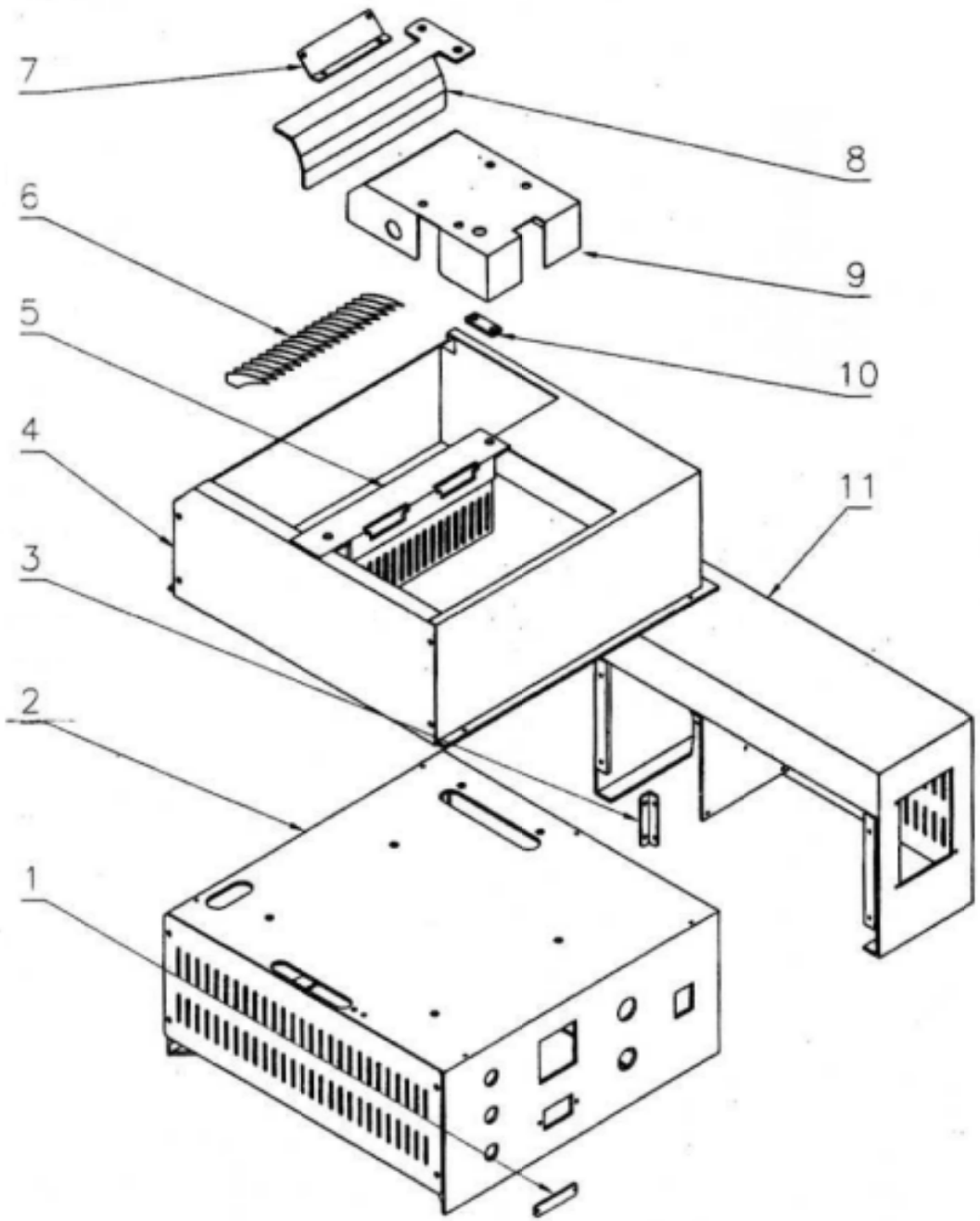

Assembly Drawing 1

HOT COAT™ Plus 7

Variable Speed Wheel

Ref.	Stock #	Qty	Name
11	7003A-AK01	1	Drive Cover
10	7003AK05	1	Bracket
9	7003HK05	1	Cover
8	7003HK06	1	Guard
7	7003AK06	1	Guard
6	7003AK04	18	Strippers
5	7003AK03	1	Strainer
4	7003AK02A	1	Shroud
3	7003AK09	1	Bracket
2	7003AK01A-1	1	Machine Frame
1	7003AK10	1	Plate

Glue Machinery Corporation™

410-761-2727 FAX: 410-761-5127

Email: info@gluemachinery.com

Web: www.gluemachinery.com

HOT COAT™ Plus 7

Assembly Drawing 2

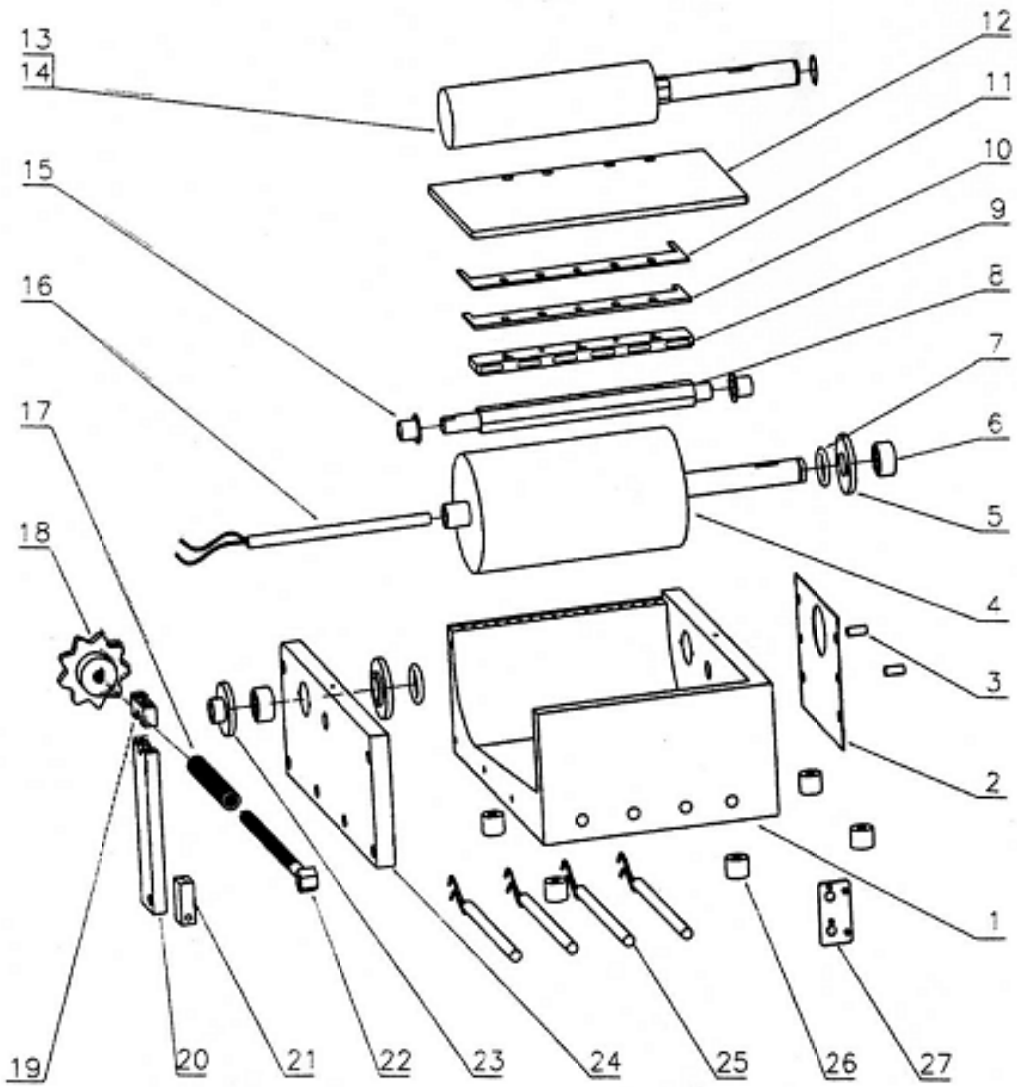

Ref	Stock No.	Qty	Description
27	7003AB13	1	Bracket
26	7002T13	5	Stand-off
25	HTA2V30W30-9.8	4	Heater
24	7003AB02	1	Side Plate
23	7003AB05	1	Bushing
22	7003AB10	1	Adjuster
21	7003AB16	1	Mounting Bracket
20	7002C02-1	1	Bracket – Lower
19	7002C02-2	1	Bracket – Upper
18	7002C04	1	Knob
17	Q111712015N	1	Spring
16	HTA2V40W20-12	1	Heater
15	MB1415FDU	2	Sleeves
14	C20A	1	Retaining Ring
13	7003HB11	1	Nip Role
12	7003AB09	1	Cover Plate
11	7003AB08-1	1	Doctor Blade
10	7003AB12	1	Support Bracket
9	7003AB07	1	Mounting Plate
8	7003AB06	1	Doctor Bar
7	OP20V	2	Seal
6	RNA4902	2	Bearing
5	7003AB03	2	Washer
4	7003HB03	1	Roll
3	7001B11	2	Roll Pins
2	7003AB04	1	Plate
1	7003AB01	1	Pot

Glue Machinery Corporation™

410-761-2727 FAX: 410-761-5127

HOT COAT™ Plus 7

Assembly Drawing 3

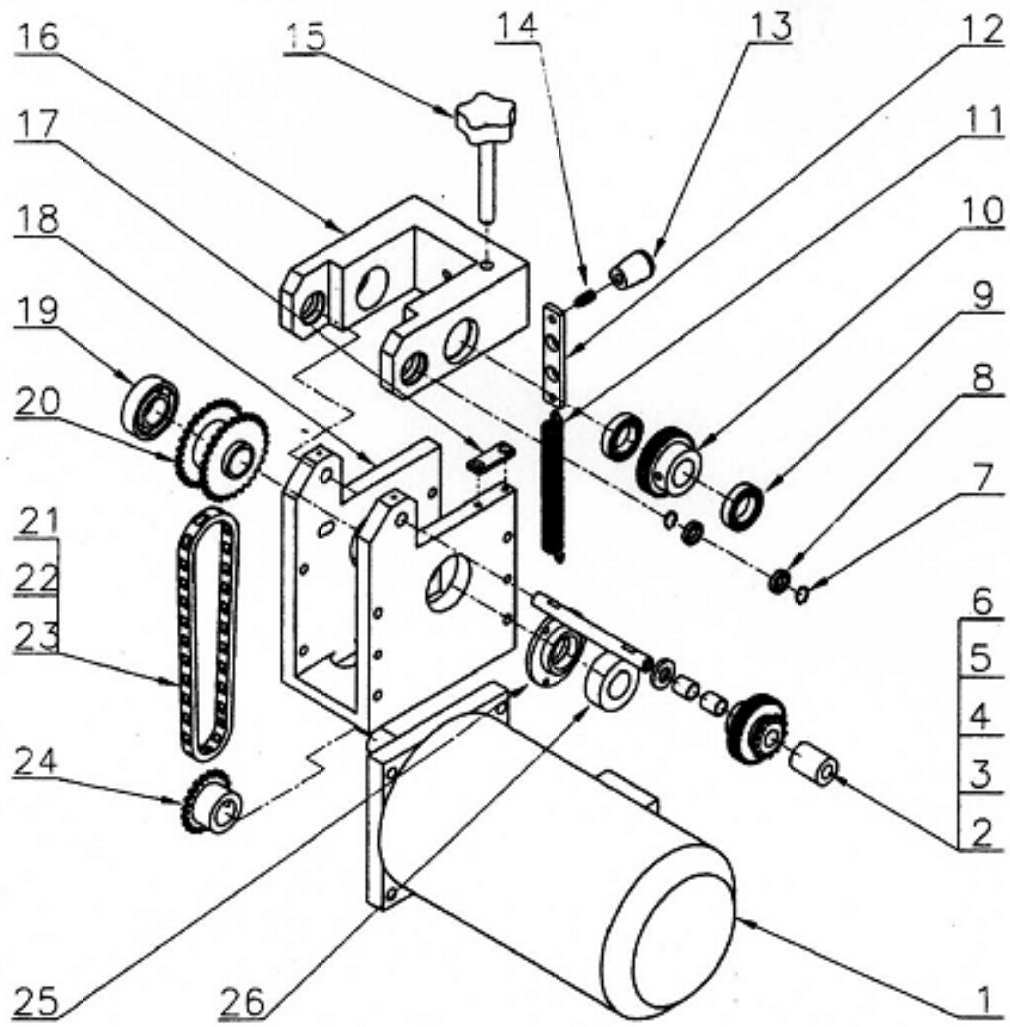

Ref	Stock No.	Qty	Description
26	7003AD02	1	Collar
25	7003AD03	1	Retainer
24	7003HD03	1	Sprocket
23	L02-2	2	Chain
22	L02-1	2	Master Link Pins
21	L02	1	Master Link
20	7003HD04	1	Chain wheel set
19	U6004ZZ	1	Bearing
18	7003AD01-1	1	Lower Bracket
17	7003AK05	1	Mounting Plate
16	7003HD02-1	1	Upper Bracket
15	7003HD09	1	Adjuster
14	8102B30	1	Set Screw
13	8102B32	1	Stop
12	8102B22	1	Mounting Plate
11	Q06089280N-T	1	Spring
10	7003HD08	1	Sprocket
9	U6804ZZ	2	Bearing
8	U6900ZZ	2	Bearing
7	C22B	2	Snap Ring
6	7003HD06	1	Shaft
5	7003HD10	1	Washer
4	MB1015DU	2	Spacer
3	7001C04	1	Sprocket
2	7003HD07-1	1	Sleeve
1	M2V200W-325Y	1	Motor – Variable Speed
*	M2V200W-125T	*	Motor - Constant Speed

Glue Machinery Corporation™
410-761-2727 FAX: 410-761-5127
Email: info@gluemachinery.com
Web: www.gluemachinery.com

SERIES NO.	ALTER AREA	ORIGINAL	MODIFIED	DATE	APP.BY

Wiring Diagram - HOT COAT™ PLUS 7

(Variable Speed Wheel)

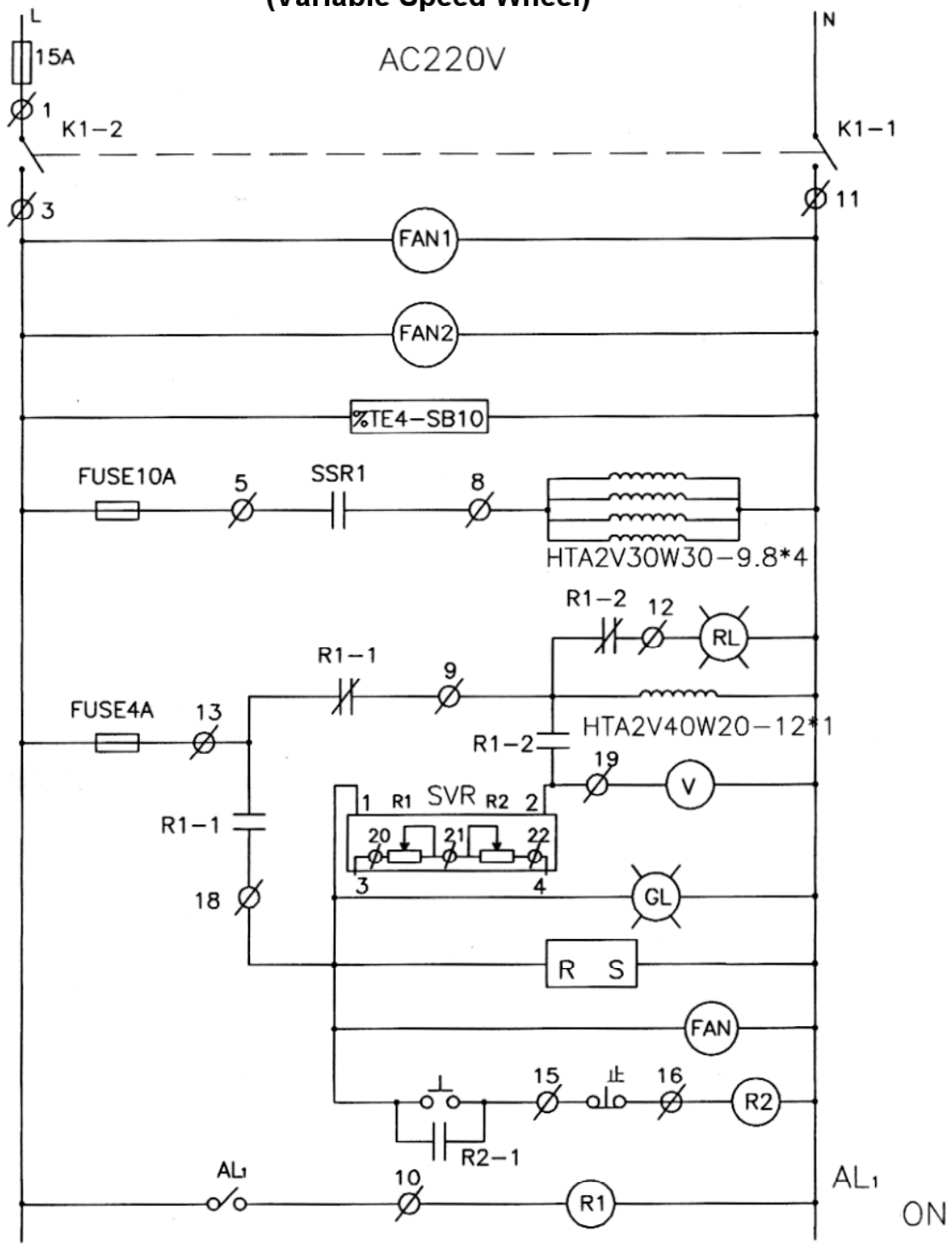

Glue Machinery Corporation™

410-761-2727 FAX: 410-761-5127

Email: info@gluemachinery.com

Web: www.gluemachinery.com

Wiring Diagram - HOT COAT™ Plus 7 (Variable Speed Wheel)

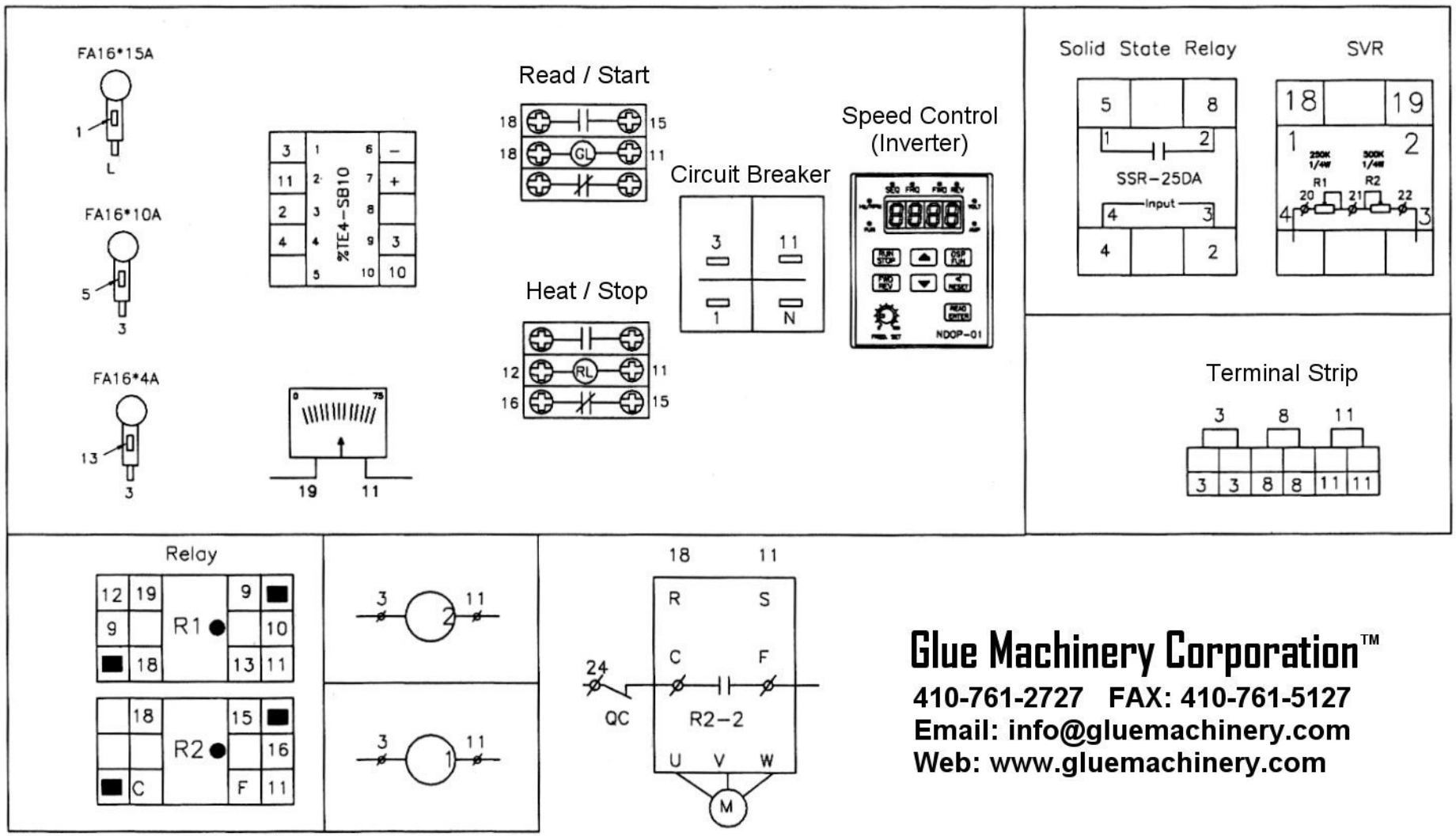

Glue Machinery Corporation™

410-761-2727 FAX: 410-761-5127

Email: info@gluemachinery.com

Web: www.gluemachinery.com

Keypad Operations:

Keypad Illustration

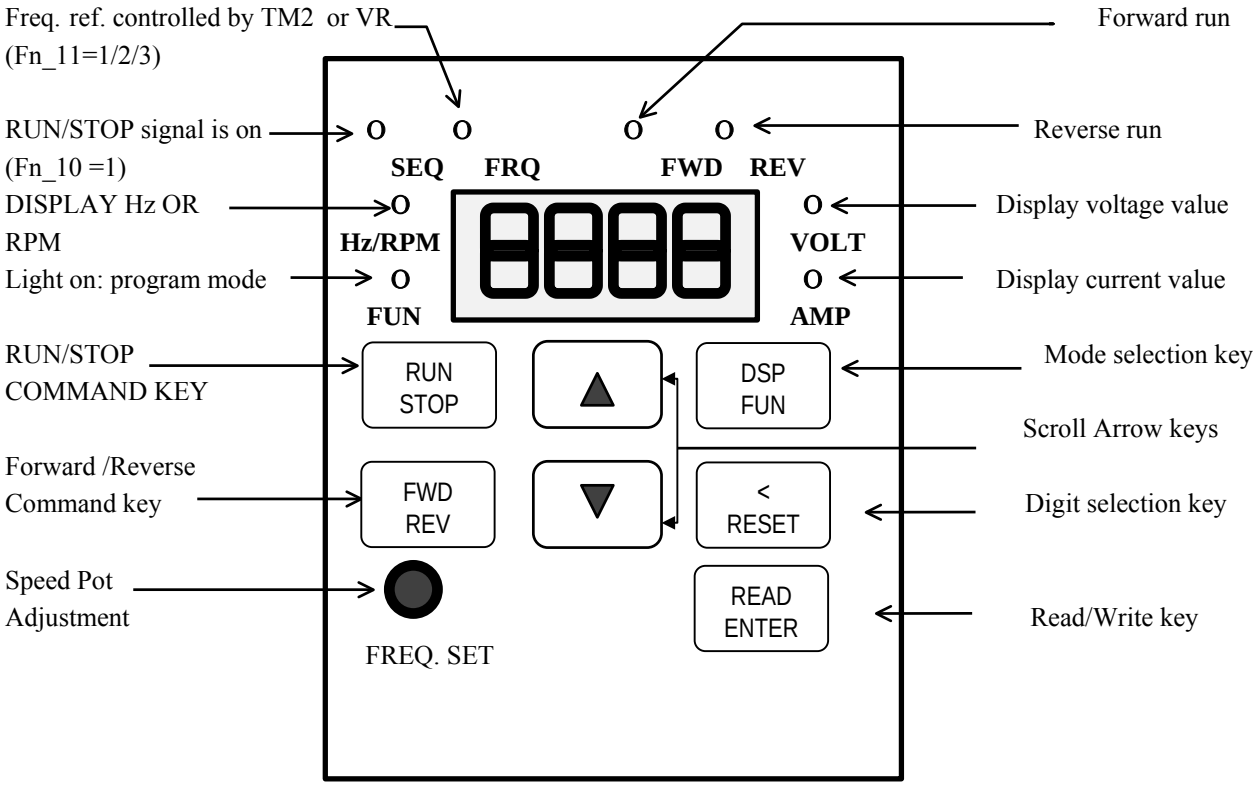

Keypad Function:

RUN STOP	● Run / Stop Button Used for Start / Stop commands from the Keypad
DSP FUN	● DSP / FUN Button Used for Displaying Functions and Meters
FWD REV	● FWD / REV Button Used for Foreword / Reverse commands from the Keypad
< RESET	● < / Reset Button Used for moving Diagonally and Resetting the Drive
READ ENTER	● READ / ENTER Used for Reading and Entering Functions
▲ ▼	● ▲ ▼ Arrows are used for moving through and Changing Parameters

Glue Machinery Corporation™
707 East Ordnance Road, Suite 401, Baltimore, MD 21226
888-202-2468 ~ Fax: 410-761-5127 ~ Email: info@gluemachinery.com
www.gluemachinery.com